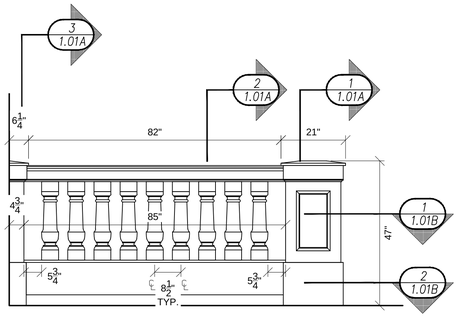

2 / 1.01 ELEVATION
SCALE: 1/2" = 1'-0" ARCH. REF: A402

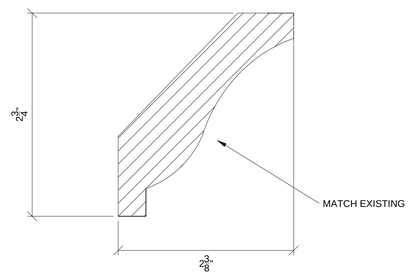

4 / 1.01 VERTICAL SECTION CROWN 'A"
SCALE:FULL SCALE ARCH. REF: QTY. 100 LN/FT REQ.

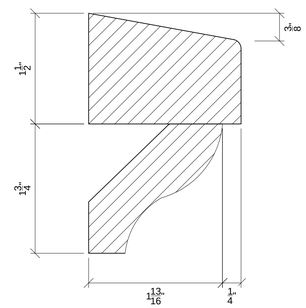

5 / 1.01 VERTICAL SECTION BAND MOLD 'A"
SCALE:FULL SCALE ARCH. REF: QTY. 120 LN/FT REQ.

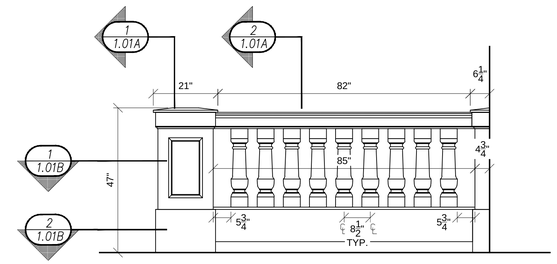

3 / 1.01 ELEVATION
SCALE: 1/2" = 1'-0" ARCH. REF: A402

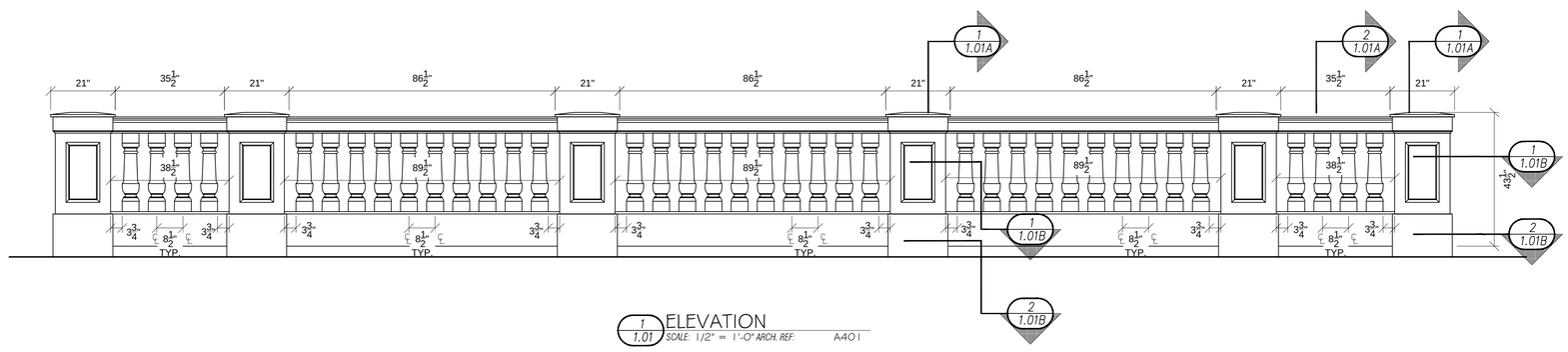

1 / 1.01 ELEVATION
SCALE: 1/2" = 1'-0" ARCH. REF: A401

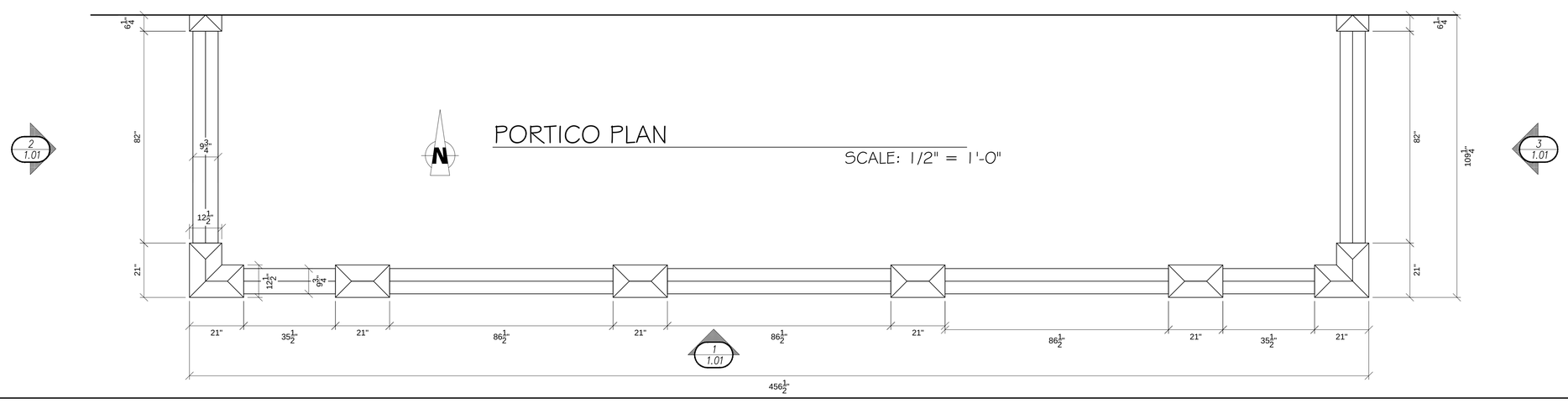

EXPOSED SURFACES

HARDWARE SCHEDULE

EXCLUSIONS

GENERAL NOTES:

All Dimensions To Be Field Verified

HATCH LEGEND

SOLID WOOD | MELAMINE | P'LAM / FLAKE
VENEER / FLAKE | VENEER / PLY | SOLID SURFACE
-XXX- INDICATES SHIPPED LOOSE

NO.	REVISION	DATE	IN

CHEYENNE COMPANY

68 E Dudley Town Rd.
Bloomfield CT 06002
800.676.8840

JOB NAME:
Choate Rosemary Hall
Hill House
Portico Renovation

ARCHITECT:

CONTRACTOR:

DRAWING TITLE:
PVC BALUSTRADE SYSTEM
PLAN AND ELEVATIONS

SCALE	DRAWN BY	APP'D. BY
AS NOTED	PM	
DATE	JOB #	DRAWING #
6.20.2011		1.01

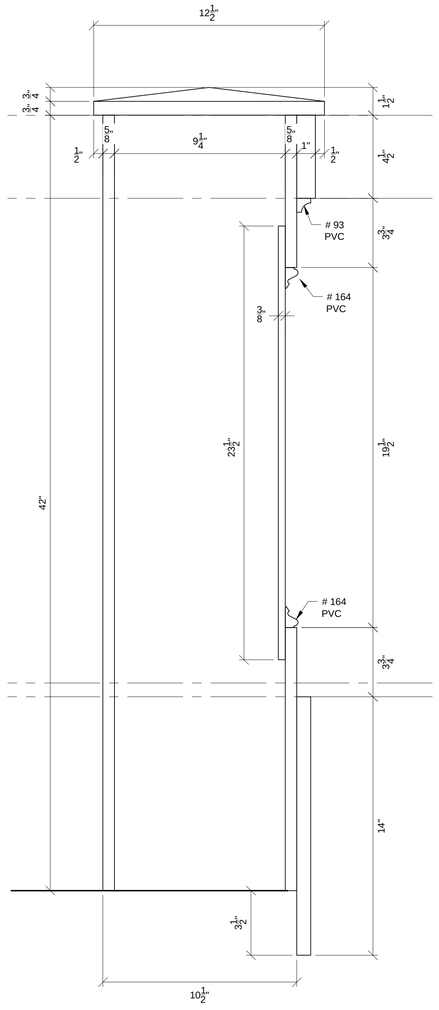

1 / 1.01A VERTICAL SECTION
SCALE: 1/2" = 1'-0" ARCH. REF: NONE

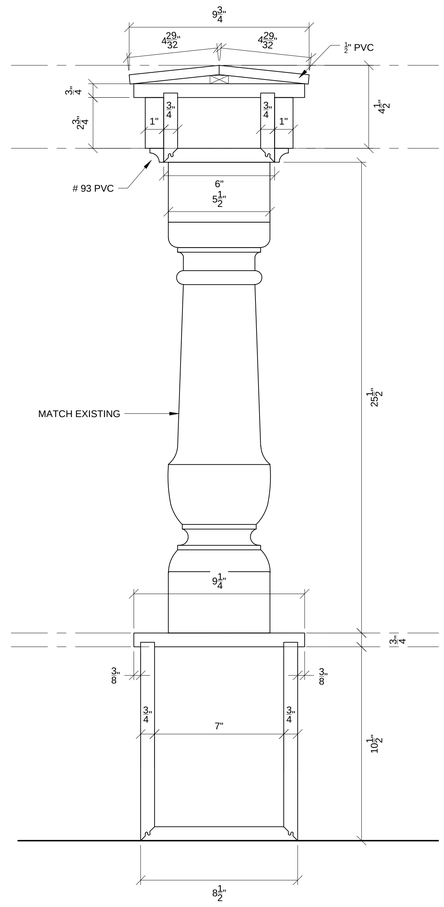

2 / 1.01A VERTICAL SECTION
SCALE: 1/2" = 1'-0" ARCH. REF: NONE

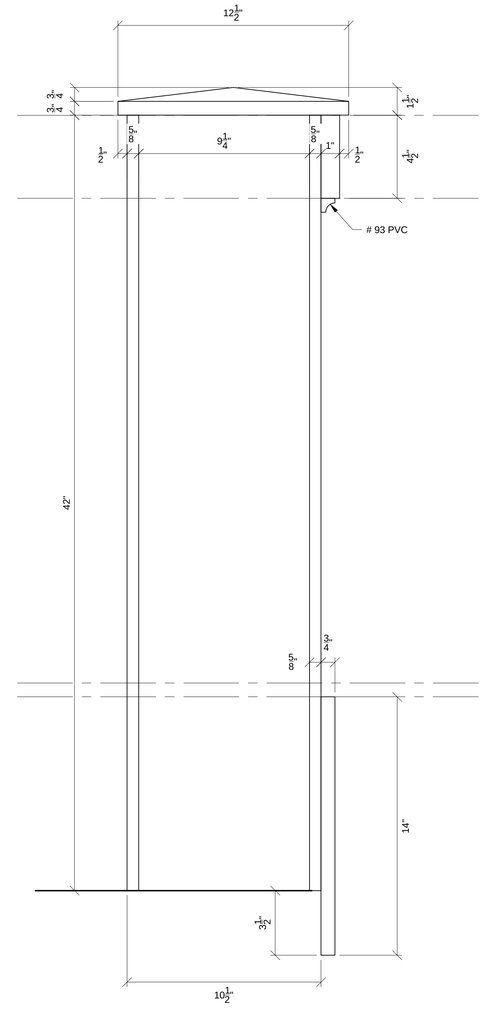

3 / 1.01A VERTICAL SECTION
SCALE: 1/2" = 1'-0" ARCH. REF: NONE

EXPOSED SURFACES

HARDWARE SCHEDULE

EXCLUSIONS

GENERAL NOTES:

All Dimensions To Be Field Verified

HATCH LEGEND

SOLID WOOD | MELAMINE | P'LAM / FLAKE
VENEER / FLAKE | VENEER / PLY | SOLID SURFACE
-XXX- INDICATES SHIPPED LOOSE

NO.	REVISION	DATE	IN

CHEYENNE COMPANY

68 E Dudley Town Rd.
Bloomfield CT 06002
800.676.8840

JOB NAME:

Choate Rosemary Hall
Hill House
Portico Renovation

ARCHITECT:

CONTRACTOR:

DRAWING TITLE:

PVC BALUSTRADE SYSTEM SECTIONS

SCALE	DRAWN BY	APP'D. BY
AS NOTED	PM	
DATE	JOB #	DRAWING #
6.20.2011		1.01A

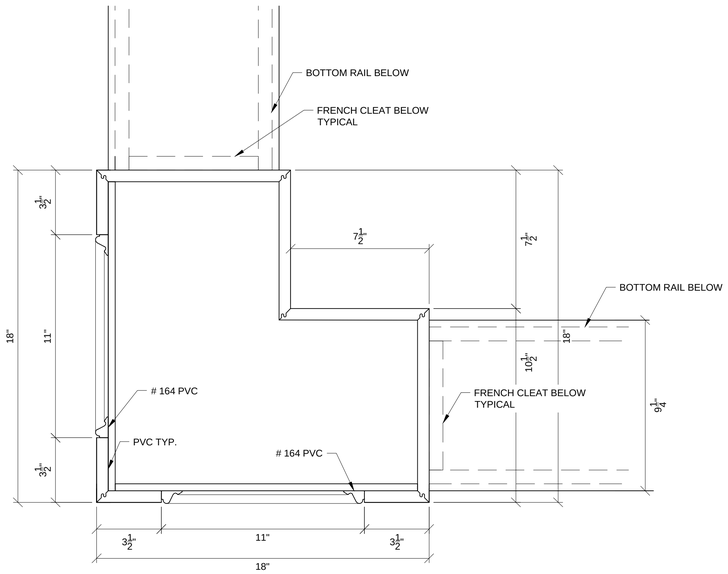

1 / 1.01B PLAN SECTION CORNER POST
SCALE: 3" = 1'-0" ARCH. REF: NONE

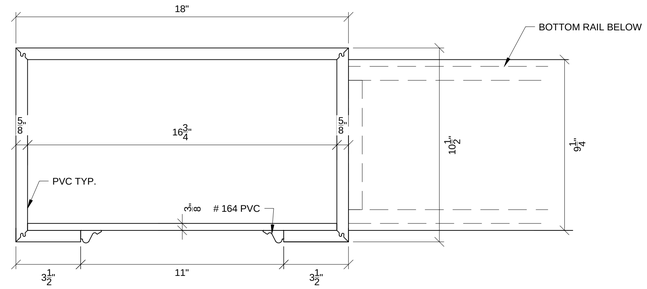

3 / 1.01B PLAN SECTION POST
SCALE: 3" = 1'-0" ARCH. REF: NONE

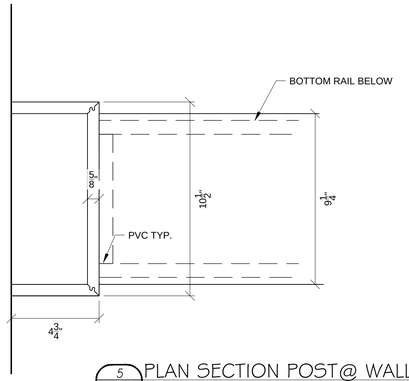

5 / 1.01B PLAN SECTION POST@ WALL
SCALE: 3" = 1'-0" ARCH. REF: NONE

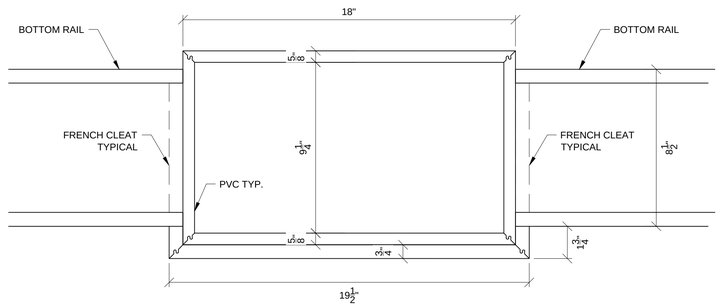

4 / 1.01B PLAN SECTION POST
SCALE: 3" = 1'-0" ARCH. REF: NONE

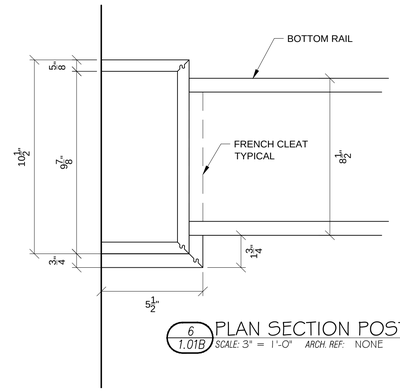

6 / 1.01B PLAN SECTION POST @ WALL
SCALE: 3" = 1'-0" ARCH. REF: NONE

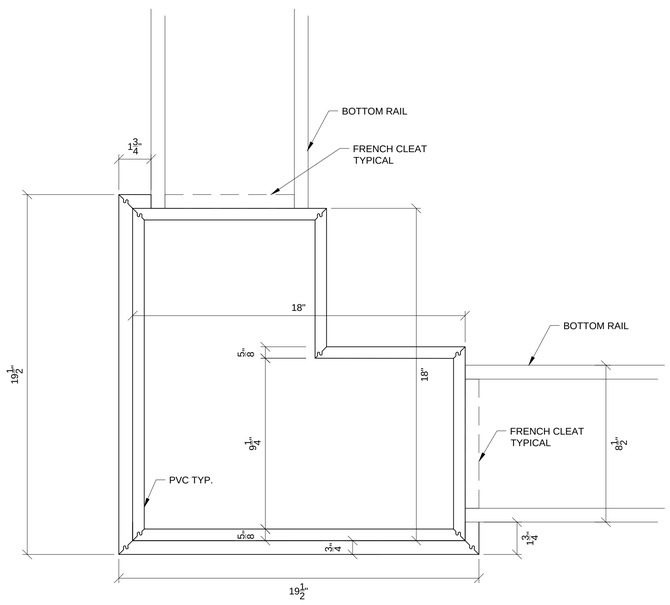

2 / 1.01B PLAN SECTION CORNER POST
SCALE: 3" = 1'-0" ARCH. REF: NONE

EXPOSED SURFACES

HARDWARE SCHEDULE

EXCLUSIONS

GENERAL NOTES:

All Dimensions To Be Field Verified

HATCH LEGEND

SOLID WOOD
MELAMINE
P'LAM / FLAKE
VENEER / FLAKE
VENEER / PLY
SOLID SURFACE

-XXX- INDICATES SHIPPED LOOSE

NO.	REVISION	DATE	IN

CHEYENNE COMPANY
68 E Dudley Town Rd.
Bloomfield CT 06002
800.676.8840

JOB NAME:

Choate Rosemary Hall
Hill House
Portico Renovation

ARCHITECT:

CONTRACTOR:

DRAWING TITLE:

PVC BALUSTRADE SYSTEM
PLAN SECTIONS

SCALE	DRAWN BY	APP'D. BY
AS NOTED	PM	
DATE	JOB #	DRAWING #
6.20.2011		1.01B

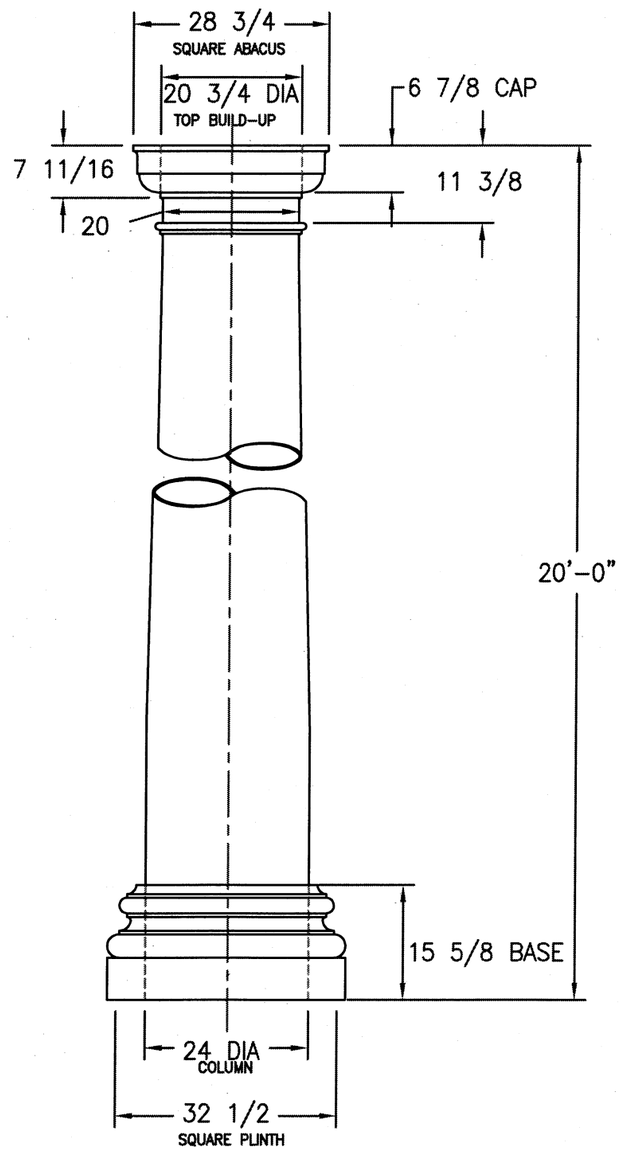

24" DIAMETER COLUMN– TUSCAN CAP & ATTIC BASE

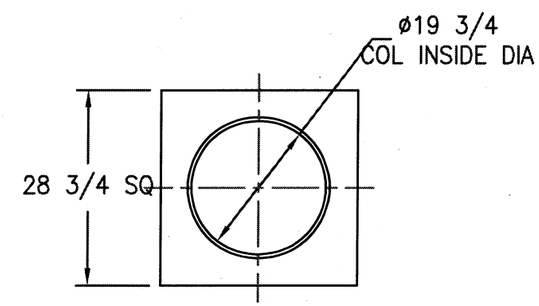

PLAN VIEW

REV	DATE	DESCRIPTION

REVISIONS

UNLESS OTHERWISE SPECIFIED DIMENSIONS ARE IN INCHES
TOLERANCES
DECIMAL .X ±.1 .XX ±.06 .XXX ±.030
ANGULAR ±.5°
FRACTION ±1/8
FINISH √
DO NOT SCALE DRAWING

CONTRACT NUMBER

ORIGINATOR H.MILLER	DATE 04/29/10	
CHECKER		
PROJECT ENGINEER		
MANUFACTURING ENGINEER		
PROGRAM MANAGEMENT		

TREATMENT N/A

FINISH N/A

SIMILAR TO	ACT WT	CALC WT
N/A	N/A	N/A

CHEYENNE COMPANY
68 East Dudley Town Rd
Bloomfield, CT 06002
Tel: 1.800.676.8840
Fax: 1.866.676.3188
www.cheyennecompany.com

TITLE FIBERGLASS COLUMN DETAIL
24" x 20'–0" COLUMN
TUSCAN CAP–ATTIC BASE

SIZE A | DRAWING NUMBER | REV –

SCALE NONE | RELEASE DATE | SHEET 1 OF 1

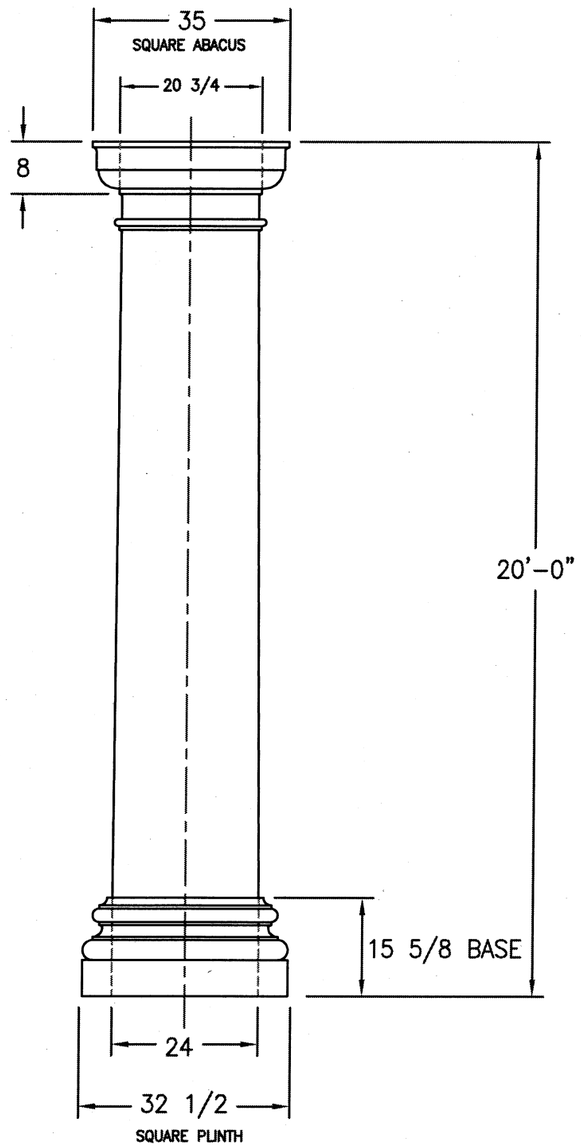

24" SQUARE PILASTER WITH A 4" RETURN
TUSCAN CAP & ATTIC BASE

PLAN VIEW

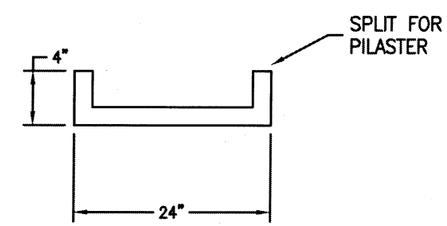

REV	DATE	DESCRIPTION	REVISIONS

UNLESS OTHERWISE SPECIFIED DIMENSIONS ARE IN INCHES
TOLERANCES
DECIMAL: .X ±.1, .XX ±.06, .XXX ±.030
ANGULAR: ±.5°
FRACTION: ±1/8
FINISH: √
DO NOT SCALE DRAWING

CONTRACT NUMBER	
ORIGINATOR: H.MILLER	DATE: 04/29/10
CHECKER	
PROJECT ENGINEER	
MANUFACTURING ENGINEER	
PROGRAM MANAGEMENT	

TREATMENT: N/A
FINISH: N/A
SIMILAR TO: N/A | ACT WT: N/A | CALC WT: N/A

CHEYENNE COMPANY
68 East Dudley Town Rd
Bloomfield, CT 06002
Tel: 1.800.676.8840
Fax: 1.866.676.3188
www.cheyennecompany.com

TITLE: FIBERGLASS SQUARE COLUMN
24" x 20'–0" COLUMN
TUSCAN CAP–ATTIC BASE

SIZE: A | DRAWING NUMBER | REV: —
SCALE: NONE | RELEASE DATE | SHEET 1 OF 1