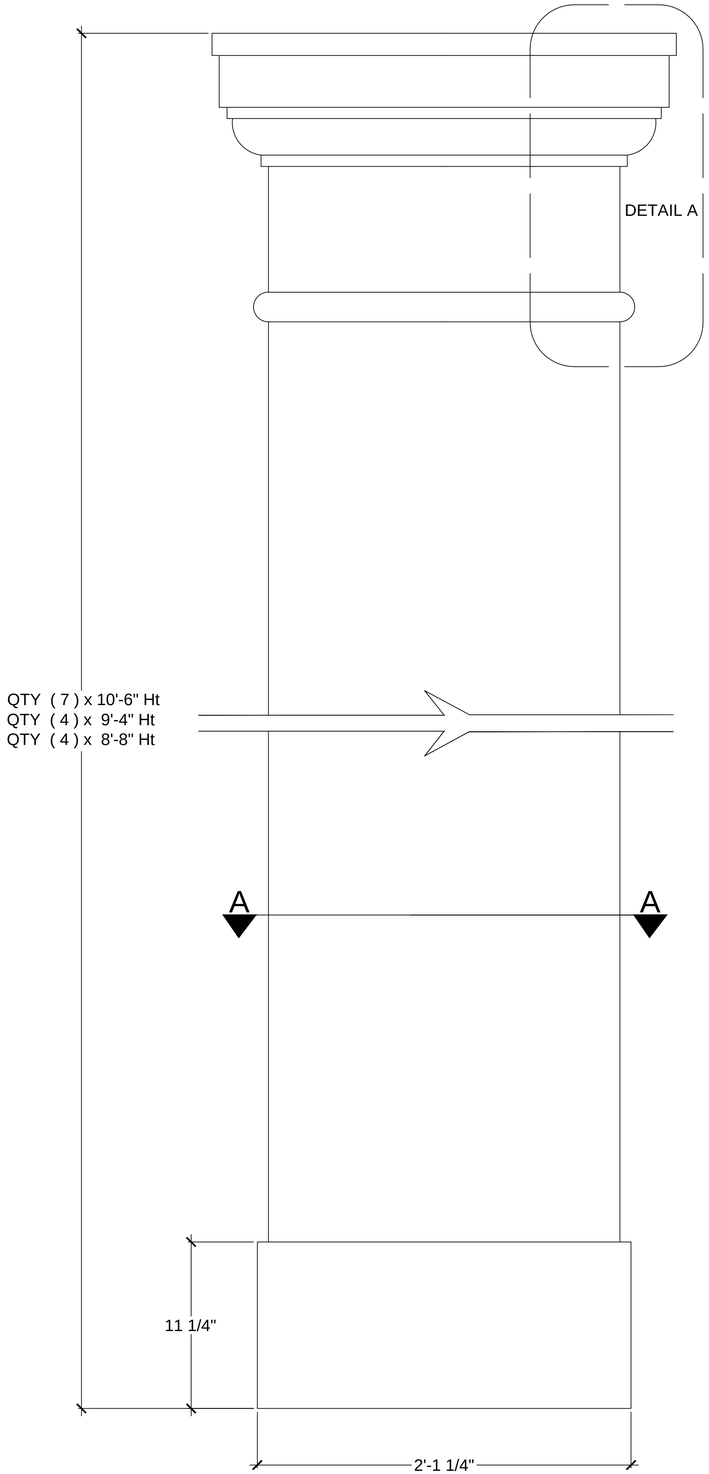


PVC COLUMN SURROUND
SCALE: 3" = 1'-0"

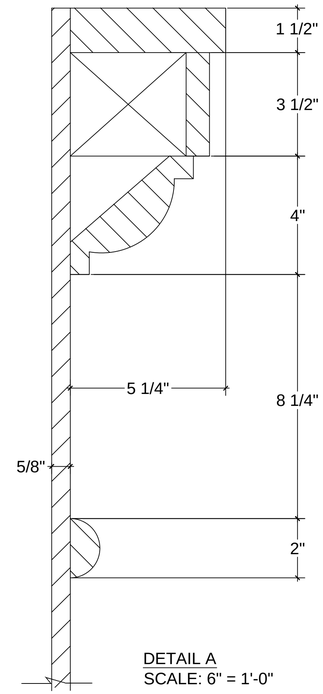


DETAIL A
SCALE: 6" = 1'-0"

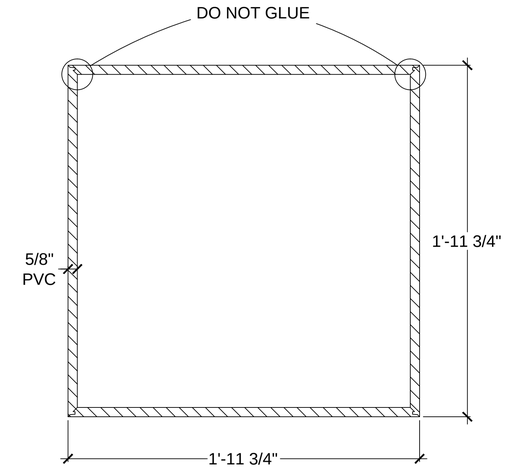


SECTION A - A
SCALE: 3" = 1'-0"
INTERNAL FRAMING
& BLOCKING BY OTHERS

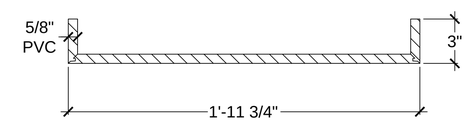


SECTION A - A
SCALE: 3" = 1'-0"
QTY. ( 7 ) PILASTERS x 10'-6" Ht.

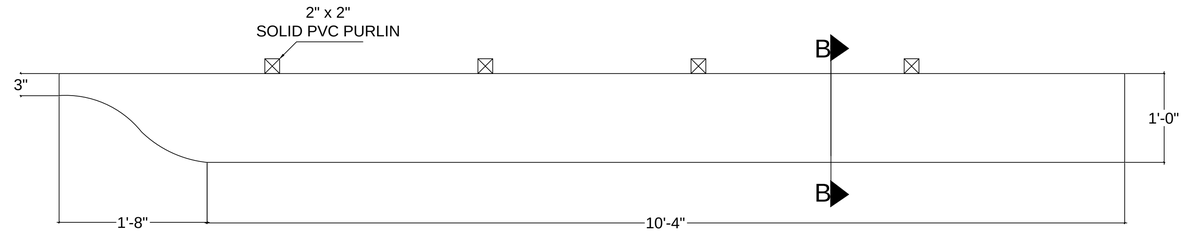


PVC PERGOLA RAFTER
SCALE: 1 1/2" = 1'-0"
QTY. ( 28 ) EA RAFTER
QTY. ( 25 ) EA PURLIN X 12'

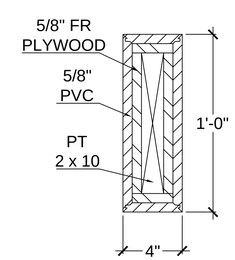


SECTION B - B
SCALE: 3" = 1'-0"
QTY. ( 28 ) RAFTERS

NOTES:

- PILASTER TO MATCH FULL HEIGHT COLUMN PRFILE INCLUDING COLUMN CAPITAL AND BASE

- PALIGHT PVC TO BE USED

68 EAST DUDLEY TOWN RD.
BLOOMFIELD, CT 06002
TEL (800) 676-8840
FAX (866) 676-3188

C:\NCDS\Cheyenne\Cheyenne_ultimo_01.jpg

This drawing and the design shown are the property of: Cheyenne Company
The reproduction, copying or other use of this drawing without the written consent is prohibited and any infringement will be subject to legal action.
© 2010 Cheyenne Company

www.cheyennecompany.com

# COLUMNS & RAFTERS

Project
REGIONAL HOSPICE

Project Manager
Trevor Forbes
Drawn By
NCDS
Date Drawn
09/05/2014
Drawing File Name

Revisions
No 1 Date 09/23/2013
No 2 Date 04/11/2014
No 3 Date 09/05/2014
No Date
Issue Date:

Project Number
DWG-01

Sheet 1 Of 2